Adder and Subtractor circuit using XS-3 method

Introduction

XS-3 (Excess-3) code is a non-weighted BCD code obtained by adding 3 to the decimal digit. It is widely used in digital systems because it is self-complementing.
This project implements an **XS-3 adder/subtractor circuit** using digital ICs to perform addition and subtraction of decimal numbers represented in XS-3 format.

Objective

- Design Xs-3 Adder and Subtractor circuit using digital logics
- Take input in decimal form
- Show result output on 7 segment displays

Design Concept and Implementation

Xs-3 Adder Subtractor circuit is based on basic algorithm of xs-3 addition and subtraction. In Xs-3 addition we convert decimal numbers into BCD adds 3 into each digit before writing; then we do simple BCD addition but if carry is generated then we add 3 (0011) into that nibble if carry is not generated then we subtract 3 (1101) from that nibble.

In this project we have made 8-bit Adder subtractor circuit and we took a Input in decimal and converted that decimal into BCD by using **IC 74LS147** then added 3(0011) into each nibble by using adder **IC 7483** by this we got required Xs-3 number; then, I created 8-bit adder subtractor circuit by using IC 7483 and gates. The final results are shown on 7 segment displays by using **IC 7447** driver.

To switch on the Subtractor circuit there is one logic state on right side of circuit which default state is zero that is addition mode; if we set it 1(high) then by XOR circuits the inputs, let's say B is converted into B' and by 2's complement while adding one into B' it gives final result as -B. Then by the adder circuit it becomes A+(-B) = A - B.

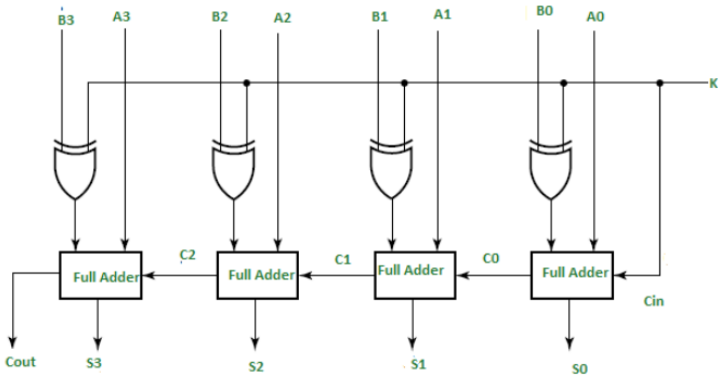

If we subtract 3 from final output decimals we get actual answer of sum.

XS-3 Adder circuit designed in Proteus:

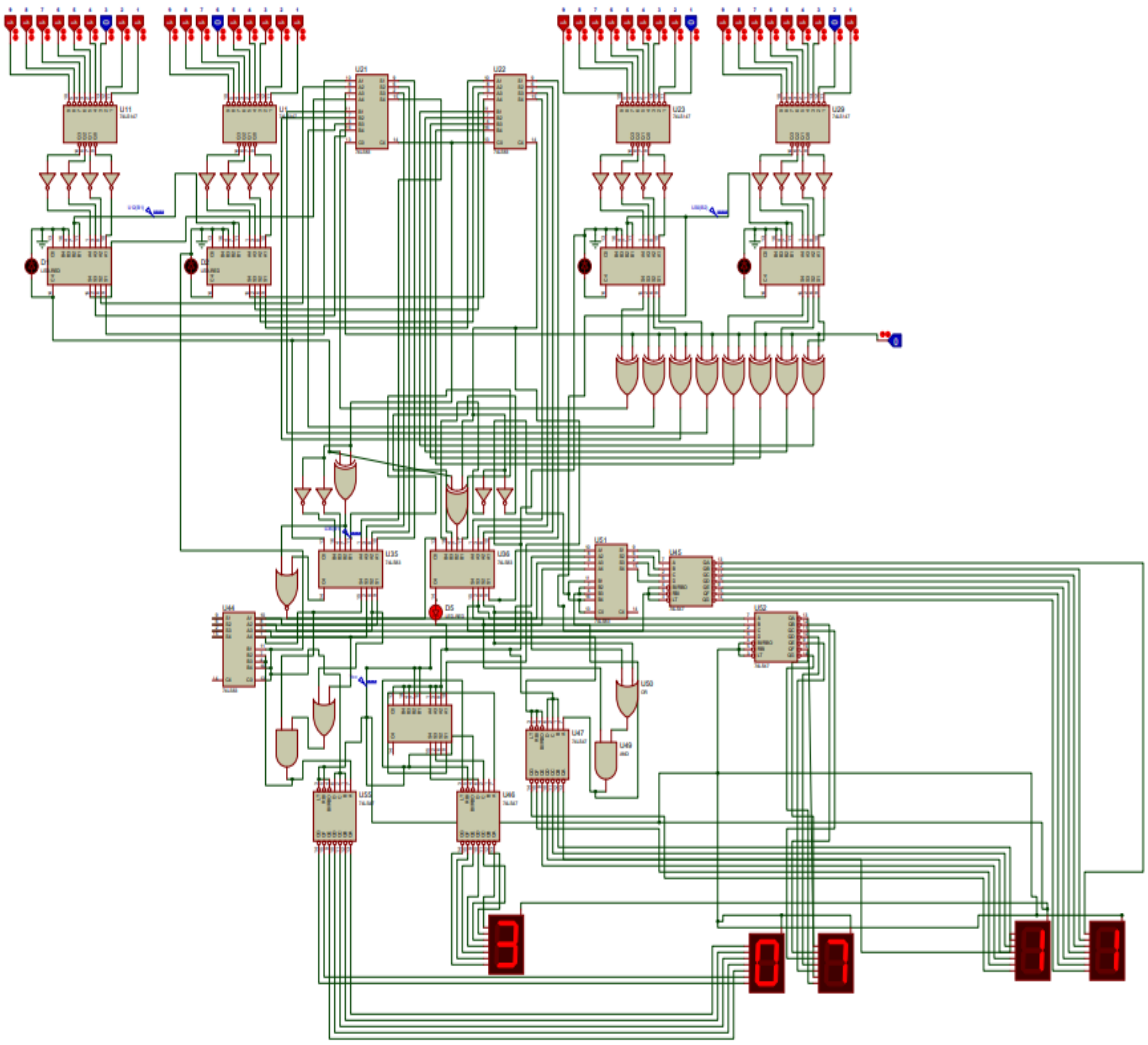

Example Calculation

50 + 54

Step 1:

Convert digits to XS-3.

5 → 1000.... (5+3=8)
0 → 0011.... (0+3=3)

5 → 1000 .... (5+3=8)
4 → 0111.... (4+3=7)

Step 2: Add using binary adder.

Step 3: Apply correction rule.

Add 3 if carry is generated anyways subtract 3.

Final output → 104

Applications

- Digital calculators
- Decimal arithmetic units
- Digital systems using self-complementing codes

Conclusion

The XS-3 adder and
subtractor was successfully implemented using standard digital ICs. The circuit demon strates how decimal arithmetic can be implemented using Excess-
3 coding and binary adders.

Circuit Simulation - https://youtu.be/ePOi_GAYs04

Project Blog- https://kshitijdigitalproject.blogspot.com/2026/03/design-of-xs-3-adder-and-subtractor.html

GitHub link – https://github.com/kshitij-wankhade/Digital-Electronics/tree/main/Design%20of%20XS-3%20Adder%20and%20Subtractor%20Using%20IC%207483